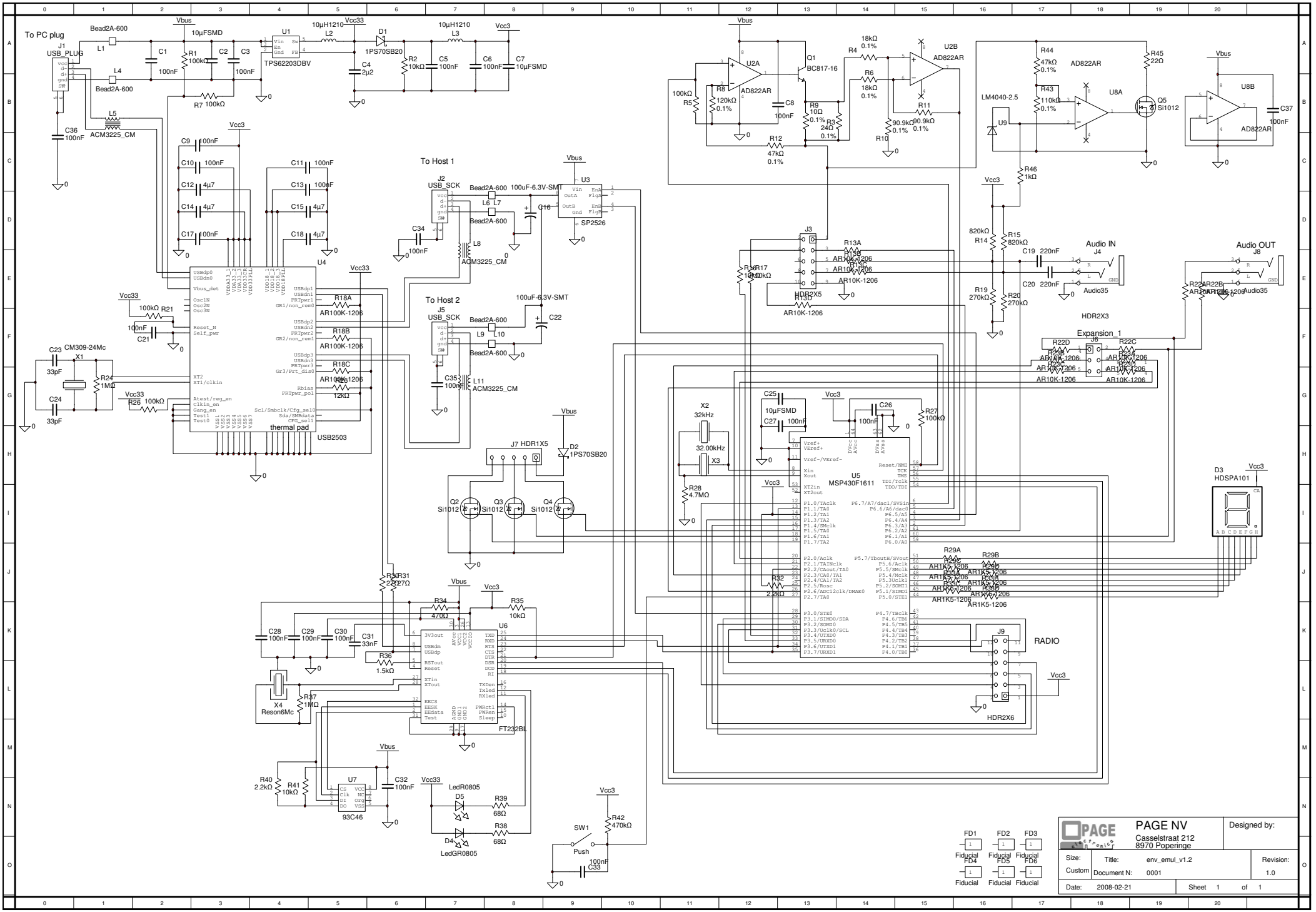
To PC plug
J1
USB_PLUG
Bead2A-600
L1
L4
C1
100nF
R1
100kΩ
C2
C3
10µFSMD
Vbus
U1
TPS62203DBV
10µH1210
L2
Vcc33
D1
1PS70SB20
C4
2µ2
R2
10kΩ
C5
100nF
10µH1210
L3
C6
100nF
Vcc3
C7
10µFSMD
R7 100kΩ
L5
ACM3225_CM
C36
100nF
C9 100nF
C10 100nF
C12 4µ7
C14 4µ7
C17 100nF
C11 100nF
C13 100nF
C15 4µ7
C18 4µ7
U4
USB2503
thermal pad
R18A
AR100K-1206
R18B
AR100K-1206
R18C
AR100K-1206
R21
100kΩ
C21
100nF
X1
CM309-24Mc
C23
33pF
C24
33pF
R24
1MΩ
R26 100kΩ
To Host 1
J2
USB_SCK
Bead2A-600
L6 L7
100uF-6.3V-SMT
C16
U3
SP2526
C34
100nF
L8
ACM3225_CM
To Host 2
J5
USB_SCK
L9 L10
C22
C35
100nF
L11
ACM3225_CM
J7 HDR1X5
D2
1PS70SB20
Q2
Si1012
Q3
Si1012
Q4
Si1012
R30
R31
22Ω
R34
470Ω
R35
10kΩ
U6
FT232BL
C28
100nF
C29
100nF
C30
100nF
C31
33nF
R36
1.5kΩ
X4
Reson6Mc
R37
1MΩ
R40
2.2kΩ
R41
10kΩ
U7
93C46
C32
100nF
LedR0805
D5
R39
68Ω
D4
LedGR0805
R38
68Ω
SW1
Push
R42
470kΩ
C33
100nF
U2A
AD822AR
R5
100kΩ
R8
120kΩ
0.1%
C8
100nF
Q1
BC817-16
R9
10Ω
0.1%
R3
24Ω
0.1%
R12
47kΩ
0.1%
R4
18kΩ
0.1%
R6
18kΩ
0.1%
U2B
AD822AR
R11
90.9kΩ
0.1%
R10
90.9kΩ
0.1%
LM4040-2.5
U9
R44
47kΩ
0.1%
R43
110kΩ
0.1%
AD822AR
U8A
R45
22Ω
Q5
Si1012
U8B
AD822AR
C37
100nF
R46
1kΩ
R14
820kΩ
R15
820kΩ
R19
270kΩ
R20
270kΩ
C19
220nF
C20
220nF
Audio IN
J4
Audio35
Audio OUT
J8
Audio35
J3
HDR2X5
R13A
R13B
R16
R17
AR10K-1206
HDR2X3
Expansion_1
J6
R22A
R22B
R22C
R22D
AR1K5-1206
X2
32kHz
32.00kHz
X3
R28
4.7MΩ
C25
10µFSMD
C27
100nF
C26
100nF
R27
100kΩ
U5
MSP430F1611
R29A
R29B
R32
2.2kΩ
AR1K5-1206
J9
RADIO
HDR2X6
D3
HDSPA101
FD1
FD2
FD3
FD4
FD5
FD6
Fiducial
PAGE NV
Casselstraat 212
8970 Poperinge
Designed by:
Size:
Custom
Title:
env_emul_v1.2
Revision:
1.0
Document N:
0001
Date:
2008-02-21
Sheet 1 of 1